Dometic

RECORD THIS UNIT INFORMATION FOR FUTURE REFERENCE:
Model Number _____
Serial Number _____
Date Purchased _____

Roof Top Unit			
Description	Model	Use With Return Air Grill	
		Model	Bimetal Control
Air Conditioner	457915 459516 459530	3105007.XXX OR 3105935.XXX	3104998.020

This unit is designed for OEM installation. All initial installations must be approved by Dometic, LLC

USA
SERVICE OFFICE
Dometic, LLC
2320 Industrial Parkway
Elkhart, IN 46516
574-294-2511

CANADA
Dometic, LLC
46 Zatonski, Unit 3
Brantford, ON N3T 5L8
CANADA
519-720-9578

For Service Center Assistance Call:
800-544-4881

⚠ WARNING

This manual must be read and understood before installation, adjustment, service, or maintenance is performed. This unit must be installed by a qualified service technician. Modification of this product can be extremely hazardous and could result in personal injury or property damage.

⚠ AVERTISSEMENT

Lire et comprendre ce manuel avant de procéder à l'installation, à des réglages, de l'entretien ou des réparations. L'installation de cet appareil doit être effectuée par un réparateur qualifié. Toute modification de cet appareil peut être extrêmement dangereuse et entraîner des blessures ou dommages matériels.

C US

INSTALLATION INSTRUCTIONS

MODELS

457915.70X
459516.70X
459530.70X

Form No. 3313559.000 8/10
(French 3313682.000)

©2010 Dometic, LLC

LaGrange, IN 46761

Important: **These Instructions must stay with unit. Owner read carefully.**

SAFETY INSTRUCTIONS

This manual has safety information and instructions to help users eliminate or reduce the risk of accidents and injuries.

RECOGNIZE SAFETY INFORMATION

This is the safety-alert symbol. When you see this symbol in this manual, be alert to the potential for personal injury.

Follow recommended precautions and safe operating instructions.

UNDERSTAND SIGNAL WORDS

A signal word, **WARNING** OR **CAUTION** is used with the safety-alert symbol. They give the level of risk for potential injury.

⚠ WARNING indicates a potentially hazardous situation which, if not avoided, could result in death or serious injury.

⚠ CAUTION indicates a potentially hazardous situation which, if not avoided, may result in minor or moderate injury.

CAUTION used without the safety alert symbol indicates a potentially hazardous situation which, if not avoided, may result in property damage.

Read and follow all safety information and instructions.

1. GENERAL INFORMATION

A. Product features or specifications as described or illustrated are subject to change without notice.

B. This "Air Conditioner" (hereinafter referred to as the "unit") Is Designed For:

1. Installation on a recreational vehicle at the time the vehicle is manufactured.
2. Mounting on the roof of a recreational vehicle.
3. Connection to an air distribution system located in the ceiling/roof cavity of the recreational vehicle.
4. Roof construction with rafters/joists on minimum of 16 inch centers.
5. Minimum of 2.00 inches and maximum of 5.50 inches distance between roof to ceiling of recreational vehicle. Alternate installation methods will allow for roofs more than 5.50 inches thick.

C. The ability of the unit to maintain the desired inside temperature depends on the heat gain of the RV. Some preventative measures taken by the occupants of the RV can reduce the heat gain and improve the performance of the unit. During extremely high outdoor temperatures, the heat gain of the vehicle may be reduced by:

1. Parking the RV in a shaded area.
2. Using window shades (blinds and/or curtains).
3. Keeping windows and doors shut or minimizing usage.
4. Avoiding the use of heat producing appliances.

Operation on High Fan/Cooling mode will give optimum or maximum efficiency in high humidity or high outside temperature.

Starting the unit early in the morning and giving it a "head start" on the expected high outdoor ambient will greatly improve its ability to maintain the desired indoor temperature.

For a more permanent solution to a high heat gain, accessories like Dometic outdoor patio and window awnings will reduce heat gain by removing the direct exposure to the sun. They also add a nice area to enjoy company during the cool of the evening.

C. Condensation

Note: The manufacturer of this unit will not be responsible for damage caused by condensed moisture on ceilings or other surfaces. Air contains moisture and this moisture tends to condense on cold surfaces. When air enters the RV, condensed moisture may appear on the ceiling, windows, metal parts, etc. The unit removes this moisture from the air during normal operation. Keeping doors and windows closed when this unit is in operation will minimize condensed moisture on cold surfaces.

SPECIFICATIONS

Model No.	Nominal Capacity (BTU HR) Cooling	Electrical Rating 120 VAC 60Hz. 1PH	Compressor Rated Load Amps	Compressor Locked Rotor Amps	Fan Motor Rated Load Amps	Fan Motor Locked Rotor Amps	Refrigerant R-410A (Oz.)	Minimum Wire Size* 12 AWG Copper Up to 24'	AC Circuit Protection ***Installer Supplied	Minimum Generator Size** 1 Unit / 2 Units
457915.70X	13,500		12.4	63.0	2.5	5.8	18.0		20 Amp	3.5 KW / 5.0 KW
459516.70X	15,000		13.3	66.0	2.0	5.6	27.5		20 Amp	3.5 KW / 5.0 KW
459530.70X	N/A		8.6	50.0	2.5	5.8	20.0		15 Amp	2.5 KW / 4.0 KW

* For wire length over 24 ft., consult the National Electric Code for proper sizing.

** Dometic, LLC gives **GENERAL** guidelines for generator requirements. These guidelines come from experiences people have had in actual applications. When sizing the generator, the total power usage of your recreational vehicle must be considered. Keep in mind generators lose power at high altitudes and from lack of maintenance.

*** CIRCUIT PROTECTION: Time Delay Fuse or Circuit Breaker Required.

2. PRECAUTIONS

A. Read Installation instructions carefully before attempting to start your unit installation.

⚠ WARNING

Improper installation may damage equipment, could endanger life, cause serious injury and/or property damage.

B. The Dometic, LLC will not be liable for any damages or injury incurred due to failure in following these instructions.

C. Installation must comply with the National Electrical Code ANSI/NFPA-70 and CSA Standard C22.1 (latest edition) and any State or Local Codes or regulations.

D. **DO NOT** add any devices or accessories to this unit except those specifically authorized in writing by Dometic, LLC.

E. This equipment must be serviced by qualified personnel and some states require these people to be licensed.

3. CHOOSING LOCATION FOR THE UNIT

This unit is specifically designed for installation on the roof of a recreational vehicle (RV). It is preferred that the unit be installed on a relatively **flat and level** roof section measured with the RV parked on a level surface, but up to a 15° tilt is acceptable.

A. **For One Unit Installation:**
The unit should be mounted slightly forward of center (front to back) and centered from side to side.

B. **For Two Unit Installations**:
Install one unit one-third and one unit two-thirds from front of RV and centered from side to side.

C. After Location Has Been Selected:
1. Check for obstructions in the area where unit will be installed. See FIG. 1.
2. The roof must be designed to support 130 pounds when the RV is in motion. Normally 200 pound static load design will meet this requirement.

⚠ CAUTION

It is the responsibility of the installer of this unit system to ensure structural integrity of the RV roof. Never create a low spot on the roof where water will collect. Water standing around the unit may leak into the interior causing damage to the product and the RV.

FIG. 1

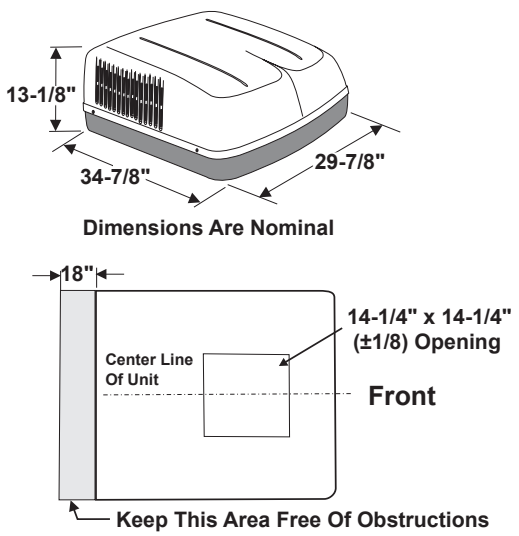

4. AIR DISTRIBUTION SYSTEM SIZING & DESIGN

The Installer of this unit system must design the air distribution system for their particular application. Several requirements for this system **MUST** be met for the unit to operate properly. These requirements are as follows:

A. The duct material must meet or exceed any agency or RVIA Standard that may be in existence at the time the RV is produced.

B. All discharge air ducts must be properly insulated to prevent condensation from forming on their surfaces or adjacent surfaces during operation of the unit. This insulation must be R-7 minimum.

C. Ducts and their joints must be sealed to prevent condensation from forming on adjacent surfaces during operation of the unit.

D. Return air openings must have 40 square inches minimum free area including the filter.

E. Return air to the unit must be filtered to prevent dirt accumulation on unit cooling surface.

CAUTION

It is the responsibility of the installer to insure the duct work will not collapse or bend during and after the installation. Dometic, LLC will not be liable for roof structural or ceiling damage due to improperly insulated, sealed or collapsed duct work.

AIR DISTRIBUTION DUCT SIZING & DESIGN CHART	
Return Air Cover Model	3105007 3105935
Roof Cavity Depth	2.0 In. Min. - 5-1/2 In. Max.
Duct Cross Sectional Area	21.0 Sq. In. Min.
Duct Size	
Depth	1-1/2 In. Min. - 2-1/2 In. Max.
Width	7.0 In. Min. - 10.0 In. Max.
Total Duct Length	15.0 Ft. Min. - 40.0 Ft. Max.
Duct Length (short run)	1/3 Total Duct Length
Register Requirements	
Number Required Per Run	4 Min.
Register Free Air Area	14.0 Sq. In.
Distance From Duct End	5.0 In. Min. - 8.0 In. Max.
Distance From Elbow	15.0 In.
Note: Duct sizes listed are inside dimensions.	

5. AIR DISTRIBUTION SYSTEM INSTALLATION

A. Dometic, LLC recommends the basic configuration shown in FIGS. 3 & 4 for installing this unit system. We have found by testing , that this configuration works best in most applications of this unit. It is the responsibility of the Installer of this system to review each RV floor plan and determine the following:

1. Duct size
2. Duct layout
3 Register size
4. Register location
5. Thermostat location

These items must be determined in conjunction with the Air Distribution System Sizing and Design Requirements listed in the chart on page 4.

Important: Alternate configurations and methods may be used which still allow the unit to operate properly; however, these alternate configurations and methods must be approved by the Dometic, LLC in writing. The following instructions are based upon the use of Return Air Grill Kits 3105007.XXX & 3105935.XXX.

B. ROOF AND CEILING OPENING PREPARATION

⚠ WARNING

There may be electrical wiring between the roof and the ceiling. Disconnect 120 VAC power cord and the positive (+) 12 VDC terminal at the supply battery. Failure to follow this instruction may create a shock hazard causing death or severe personal injury.

1. A 14-1/4" x 14-1/4" (±1/8") opening must be cut through the roof and ceiling of the RV. This opening must be located between the roof reinforcing members.
2. Mark a 14-1/4" x 14-1/4" (±1/8") square on the roof and carefully cut the opening.
3. Using the roof opening as a guide, cut the matching hole in the ceiling.
4. The opening created must be framed to provide adequate support and prevent air from being drawn from the roof cavity. Framing stock 3/4" or more in thickness must be used. Remember to provide an entrance hole for power supply wiring and thermostat cable. See FIG. 2.

FIG. 2

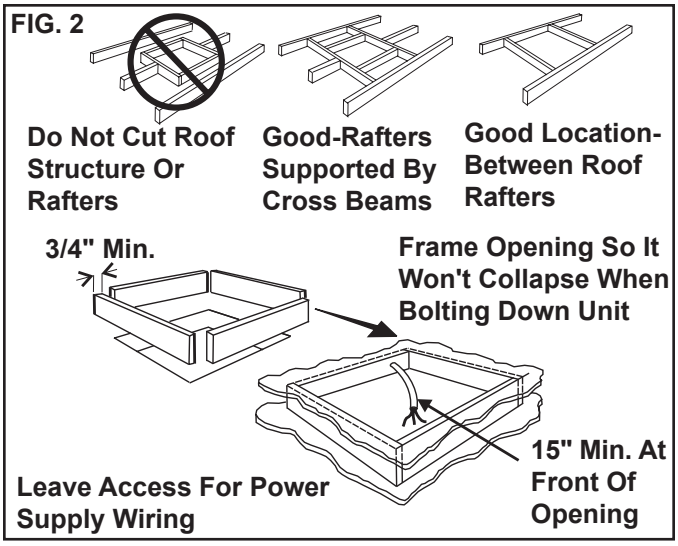

5. The 14-1/4" x 14-1/4" (±1/8") opening is part of the return air system of the unit and must be finished in accordance with NFPA Standard 501C Section 2.7.
6. Route a copper, with ground, 120 VAC supply wire from the time delay fuse or circuit breaker box to the roof opening. The proper size wire can be determined from chart on page 3.
   a. This supply wire must be located in the front portion of the 14-1/4" x 14-1/4" (±1/8") opening.
   b. The power MUST be on a separate time delay fuse or HACR circuit breaker. The proper size protection can be determined from the chart on page 3.
   c. Make sure at least 15" of supply wire extends into the roof opening. This ensures easy connection at the junction box.
   d. Wiring must comply with NFPA 70: National Electrical Code regulations and any State or Local Codes or regulations.
   e. Protect the wire where it passes into the opening with approved method. See paragraph "d" above.
7. See Section 6. Thermostat & Cable Installation.

C. AIR DISTRIBUTION DUCT INSTALLATION

1. Install the Air Distribution Ducts in the RV Roof Cavity. The Distribution System must meet:
   a. RV's requirements
   b. System requirements listed in Section 4 on page 4 of this manual.

FIG. 3

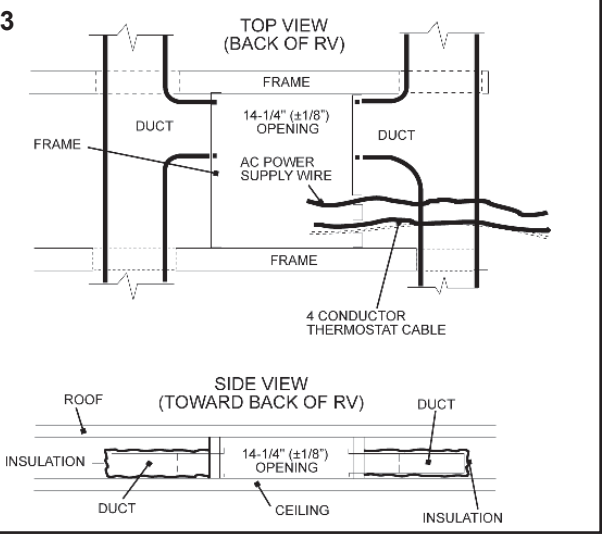

6. THERMOSTAT & CABLE INSTALLATION

A. LOCATION

The proper location of the thermostat is very important to ensure that it will provide a comfortable RV temperature. Observe the following general rules when selecting a location.

1. Locate the thermostat 54" above the floor.
2. Install thermostat on a partition, **NEVER** on an outside wall.
3. **NEVER** expose it to direct heat from lamps, sun or other heat producing items.
4. Avoid locations close to doors that lead outside, windows or adjoining outside walls or directly under cabinets or overhangs which limit air movement.
5. Avoid locations close to supply registers and the air from them.
6. **NEVER** locate thermostat in a room that is warmer or cooler than the rest of the coach - such as the kitchen.
7. The major living area is normally a good location.

FIG. 4 **Duct Size And Requirements For 3105007 And 3105935 Return Air Cover**

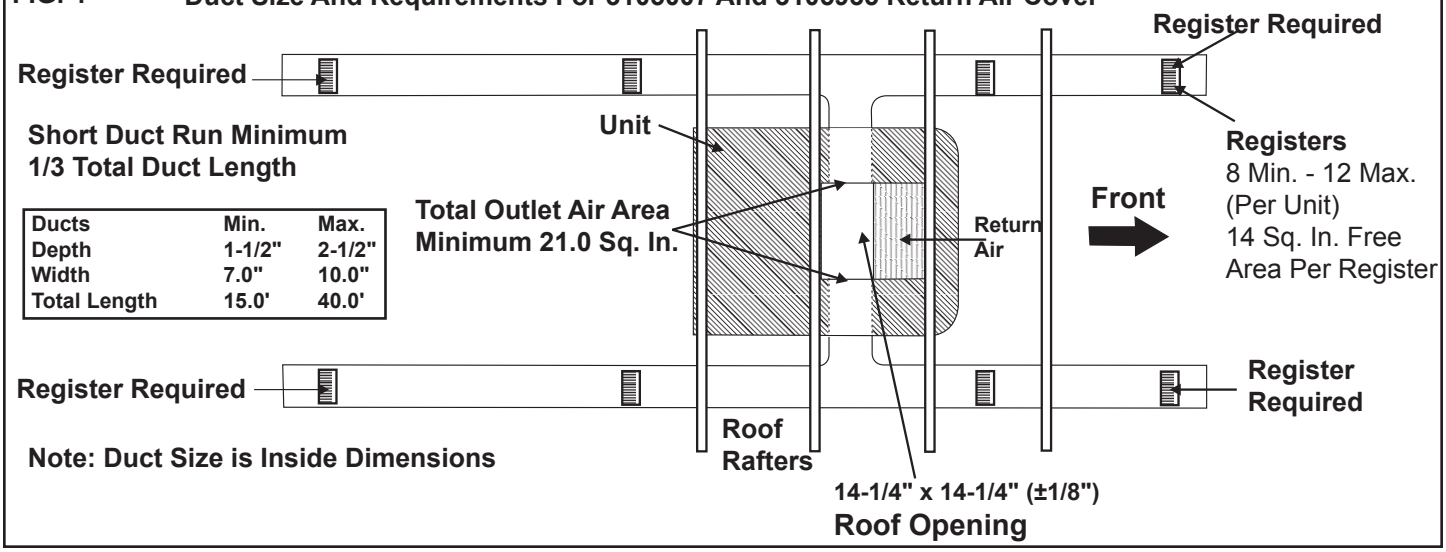

Ducts	Min.	Max.
Depth	1-1/2"	2-1/2"
Width	7.0"	10.0"
Total Length	15.0'	40.0'

Note: Duct Size is Inside Dimensions

B. CABLE INSTALLATION

1. A 4 conductor cable, 18 to 22 AWG is to be used for low voltage connections.
2. Choose the shortest, direct route from the 14-1/4" x 14-1/4" (±1/8") opening to the thermostat location selected.
3. Consider where screws, nails or staples might contact the cable.
4. Leave approximately 6" of cable extending through the wall for connection to the thermostat.
5. Leave approximately 15" of cable extending into the 14-1/4" x 14-1/4" (±1/8") opening for connection at unit.
6. If system is to control a gas furnace: Route two 18 gauge wires from the furnace to wall thermostat.

7. PLACING THE Unit ON THE ROOF

A. Remove the unit from the carton. The unit mounting bolts and literature are in a separate plastic bag. Be sure to place this information in the RV.

⚠ CAUTION

This unit weighs approximately 100 pounds. To prevent back injury, use a mechanical hoist to place unit on roof.

B. Place the unit on the roof.

CAUTION

Do not slide the unit. This may damage the neoprene gasket attached to the bottom and create a leaky installation.

C. Lift and place the unit over the prepared opening using the gasket on unit as a guide. The roof gasket on the bottom of the base pan goes toward the front of the RV. Sliding the unit on the roof will damage the roof gasket. See FIG. 5.

FIG. 5

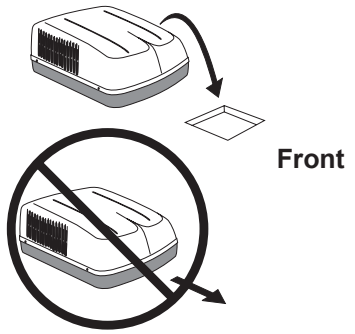

D. Place 3104998 Relay Kit and Return Air Cover Kit, inside the RV. These cartons contain mounting hardware for the unit and will be used inside the RV. This completes the outside work. Minor adjustments can be done from the inside of the RV if required.

8. INSTALLATION OF COLD CONTROL

A. Remove parts package, control box and thermostat from the 3104998 Control Kit carton and identify the mounting for cold control. See FIGS. 6 & 7.

B. Freeze Control Installation. See FIGS. 6 & 7.

1. Place the cold control switch up through the base pan and on the second refrigerant tube from the bottom in the center of the evaporator coil. Make sure the spring clip is fastened securely to the tubing and the cold control surface is making contact with aluminum fins on evaporator coil. See FIGS. 6 & 7.
   a. Keep wires away from sharp edges to prevent damaging the wires. Use wire ties if necessary. See FIGS. 6 & 7.
   b. Remove installation notice hang tag from freeze control. See FIG. 7.

FIG. 6

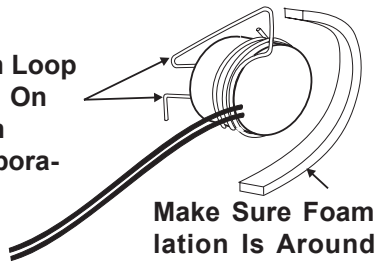

FIG. 7

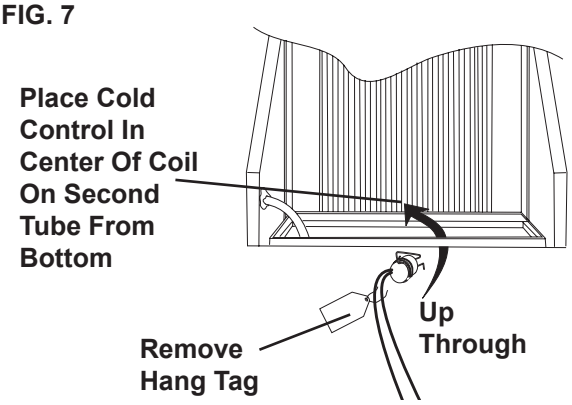

9. WIRING OF CONTROL SYSTEM

A. CONNECTION OF 120 VAC SUPPLY

⚠ WARNING

Disconnect 120 VAC. Failure to follow these instructions could create a shock hazard causing death or severe personal injury.

⚠ WARNING

This product is equipped with a 3 wire (grounded) system for protection against shock hazard. Make sure that the appliance is wired into a properly grounded 120 VAC circuit and the polarity is correct. Failure to do so could result in death, personal injury or damage to the equipment.

1. Route the previously run 120 VAC power supply line through the Romex Connector and into relay control junction box.
2. Reach up into the return air opening of the unit and pull the unit electrical cord down for later installation.
3. Connect the white to white; black to black; and green to green or bare copper wire using appropriate sized "listed" wire connectors.
4. Tighten screws on Romex connector being careful not to pinch and cut into the insulation on power supply leads.
5. Push excess wires into junction box. Install junction box cover, with model number/serial number facing out onto the relay control box, with #8 x 3/8" blunt point Phillips head screw provided.

Note: Model Number /Serial Number label must face out.

B. CONNECT LOW VOLTAGE WIRES

CAUTION

Disconnect the positive (+) 12 volt DC terminal at the supply battery. Damage to equipment could occur if the 12 volt DC is not shut off.

1. Connect red wire from control box to the thermostat **"RC"** terminal. See FIG. 8.
2. Connect the control box orange wire to the thermostat **"G"** terminal. See FIG. 8.
3. Connect the control box yellow wire to the thermostat **"Y"** terminal. See FIG. 8.
4. Connect the control box blue wire to the thermostat "**H"** terminal. See FIG. 8.

FIG. 8

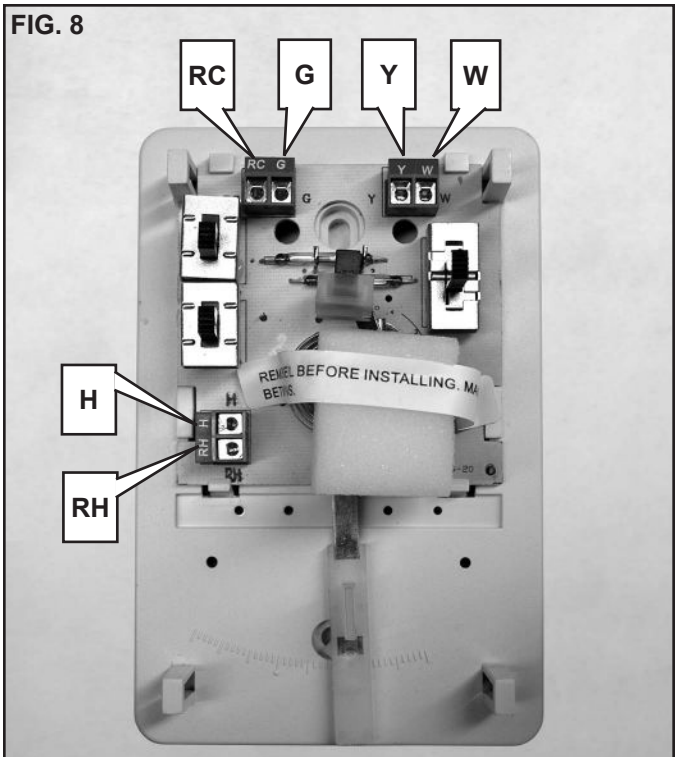

Thermostat Connections

Red Wire (Control Box) - "RC" (Tstat)	Orange Wire (Control Box) - "G" (Tstat)
Yellow Wire (Control Box) - "Y" (Tstat)	Blue Wire (Control Box) - "H" (Tstat)
Red (Furnace if Present) - "RH" (Tstat)	White (Furnace if Present) - "W" (Tstat)

Note: The provided thermostat is a "heat/cool thermostat". These instructions cover only the cooling connections required. If connection of furnace is required, follow the instructions provided with the furnace. Normally the furnace will connect to the **"RH"** and **"W"** terminals on the thermostat.

C. Plug unit electrical cord into the mating connector on the relay control box. These connectors are polarized and will easily snap together. Do not force.

10.INSTALLING UNIT

FIG. 9

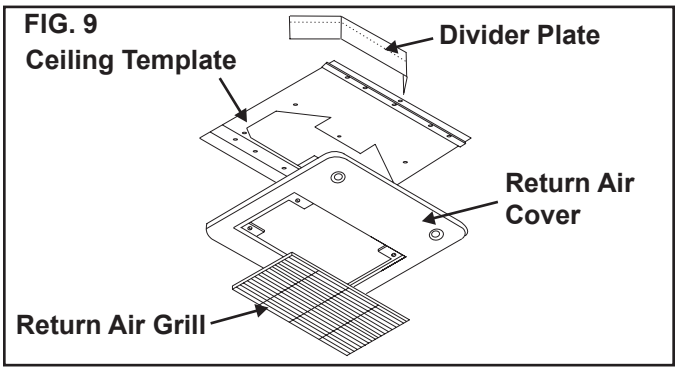

A. INSTALLATION OF CEILING TEMPLATE

1. Check gasket alignment of the unit over the roof opening and adjust if necessary. Unit may be moved from below by slightly lifting and sliding. See FIG. 10.

FIG. 10

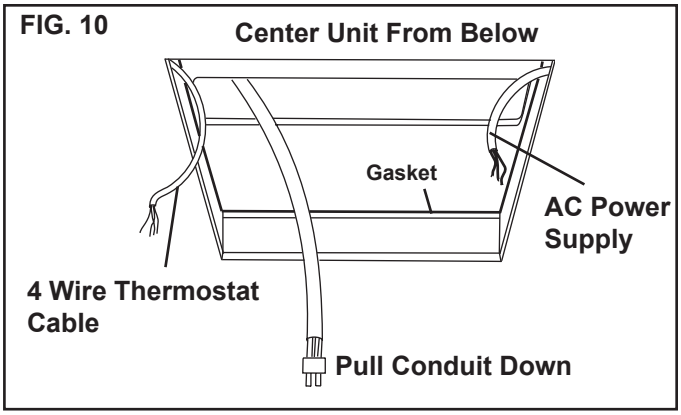

2. Remove return air cover and ceiling template from the 3105007 or 3105935 kit carton.
3. Locate 1/4-20 x 8" unit mounting bolts in the 3104998 control package.
4. Hold the ceiling template up to the 14-1/4" x 14-1/4" (±1/8") opening. Be sure the large plate faces the rear of the RV.
5. Start each mounting bolt through the ceiling template and up into the unit base pan by hand. **EVENLY tighten the three bolts to a torque of 40 to 50 inch pounds. This will compress the roof gasket to approximately 1/2". The bolts are self locking so further tightening is not necessary. See FIG. 11.**

CAUTION

If bolts are left loose there may not be adequate roof seal or if over tightened, damage may occur to the unit base or ceiling template. Tighten to specifications listed in this manual.

FIG. 11

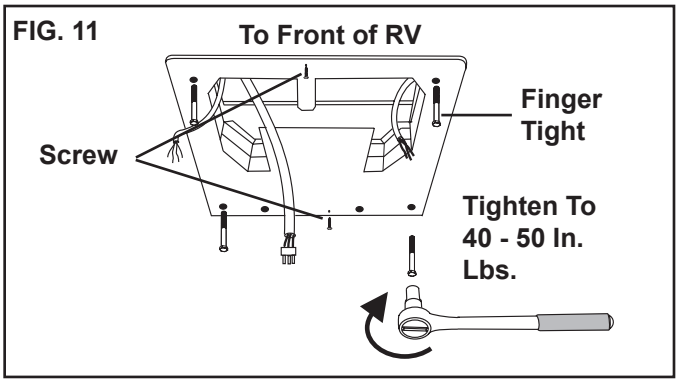

6. Install wood screw in each end of the ceiling template. This insures a tight fit of the return air cover to ceiling. See FIG. 11

B. INSTALLATION OF DIVIDER PLATE

1. Measure the ceiling to roof thickness:
   a. If distance is 2.0" - 3-3/4", remove perforated tab from divider plate.
   b. If distance is 3-3/4" - 5-1/2", remove no tabs.
2. Remove the backing paper from double sided tape located on ceiling template. See FIG. 12.

FIG. 12

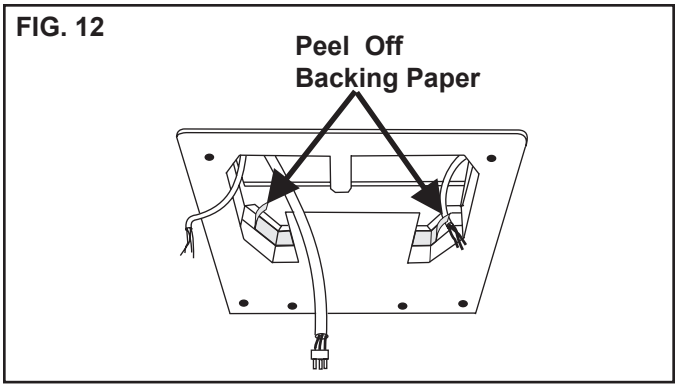

3. Place divider plate up to bottom of unit base pan firmly. The foam tape on the divider plate must seal to bottom of base pan. See FIG. 13.

CAUTION

Improper installation and sealing of divider plate will cause the compressor to quick cycle on the cold control. This may result in fuse or circuit breaker opening and/or lack of cooling.

FIG. 13

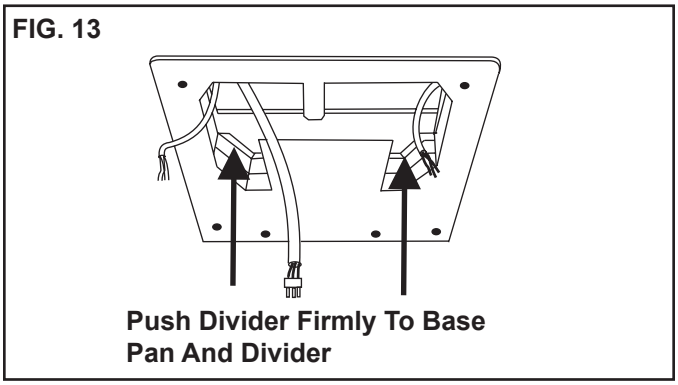

Note: The adhesive on the insulation is extremely sticky. Be sure the part is located where desired before pressing into place.

4. With slight pressure then push the divider plate against the double sided tape on the ceiling template.
5. Locate the 1/8" x 7" x 18" self -adhesive insulation supplied with the return air kit. Remove the backing paper from the insulation and carefully stick onto the ceiling template divider panel. See FIG. 14.

FIG. 14

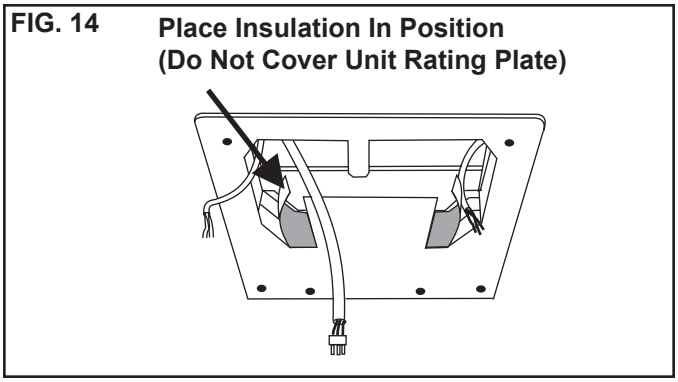

a. Excess width is intended to seal the divider plate to the sides of the 14-1/4" x 14-1/4" (±1/8") opening. This is to help prevent cold air discharge from circulating into the unit return air opening.
b. If the insulation is to high, stick excess height of insulation to the unit base pan. Do not cover up unit rating plate.

C. Installing Return Air Cover

1. Locate the relay control box on the ceiling template with the white 6 connector plug on the right (curb side) of RV.
2. Drive two #10 x 3/8" blunt point Phillips head screws through the ceiling template into holes in control box to hold it in place.
3. Remove the return air grill from the return air cover.
4. Place the return air cover up to the ceiling template.
5. Install cover to template with #8 x 3/8" blunt point Phillips head screws provided (6 required).
6. Reinstall filter return air grill into return air cover. Align tabs with mating notches and snap into place
7. Install two hole plugs into screw holes in back of return air cover. See FIG. 15.

FIG. 15

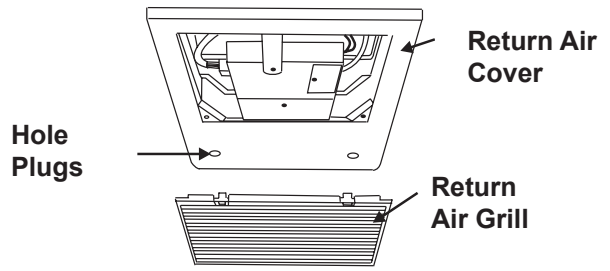

8. Check all wiring for correctness.
9. This completes the installation of the unit. We recommend that power be supplied to the unit and check out operation.

WIRING DIAGRAM

Unit Wiring Diagram

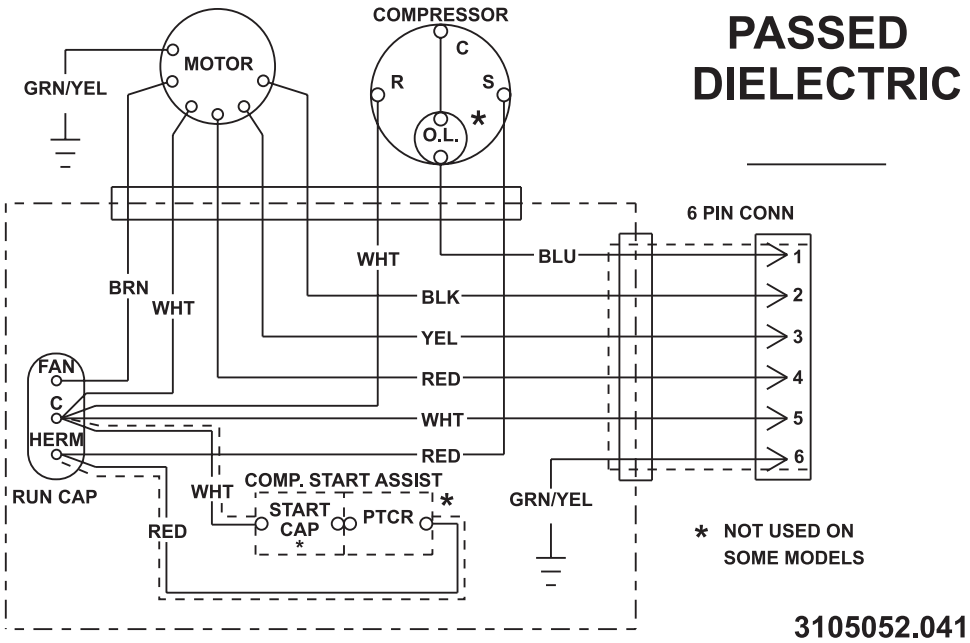

3314998.020 Bimetal Control Kit Wiring Diagram

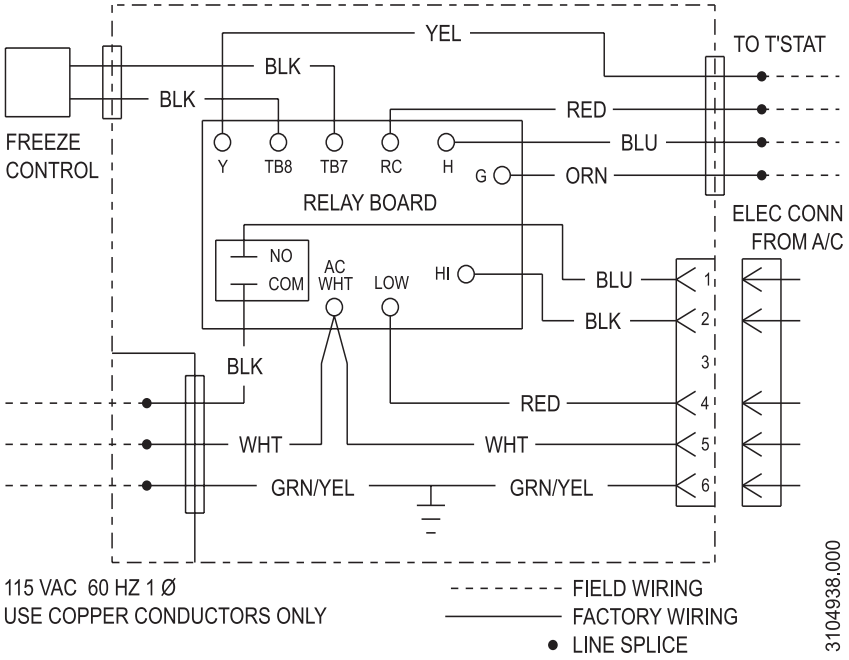

This manual has been provided courtesy of My RV Works, Inc.

www.myrvworks.com

You can find more RV service manuals here:

www.myrvworks.com/manuals

Over the years of running a mobile RV repair service, having a dedicated place to access service manuals for all the different appliances and components found on RVs was something that I always had a desire to create.

I hope this resource makes your RV repairs easier, as it has mine, but please be careful and follow proper safety practices when attempting to repair your own RV.

If in doubt, please consult with a professional RV technician!

DARREN KOEPP - OWNER, MY RV WORKS, INC.

All service manuals provided on www.myrvworks.com are believed to be released for distribution and/or in the public domain.