GIRARD PRODUCTS. LLC.

# Owner's Manual

## Model: GSWH-2

**Features:**

- **Demand Tankless Water Heater**
- **LP Gas / Induced Draft**
- **Constant Outlet Temperature**
- **Linear Gas Control Valve**
- **Electronic Gas Modulation**
- **Microprocessor Controls**

C ETL LISTED US
Intertek
5001257

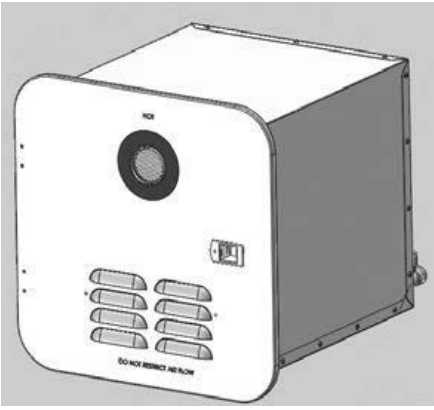

**WARNING: If the information in these instructions is not followed exactly, a fire or explosion may result causing property damage, personal injury or death.**

- Do not store or use gasoline or other flammable vapors and liquids in the vicinity of this or any other appliance.
- WHAT TO DO IF YOU SMELL GAS:
  - Evacuate all persons from the vehicle.
  - Shut off the gas supply at the gas container or source.
  - Do not touch an electrical switch, or use any phone or radio in the vehicle.
  - Do not start the vehicle's engine or electric generator
  - Contact the nearest gas supplier or qualified service technician for repairs.
  - If you cannot reach a gas supplier or qualified service technician, contact the nearest fire department.
  - Do not turn on the gas supply until the gas leak(s) has been repaired.
- Installation and service must be performed by a qualified installer, service agency or the gas supplier.

Girard Products LLC, 1361 Calle Avanzado, San Clemente CA 92673 USA

Patent Pending

# • Installation
# • Operation
# • Maintenance and Service

## Installation

This water heater is certified for installation in Recreational Vehicles (RV's) and is not for use in Marine or Space Heating Applications.

Intertek
5001257
Complies with the requirements of
ANSI Z21.10.3-2014 and CSA 4.3-2014.

**CAUTION:**
**Read and Follow all the Safety Rules and Instructions before operating this Appliance.**

### Installer/Customer Responsibilities

- Installation and Service must be performed by a Girard Products recommended installer, service agency or gas supplier.
- Do not attempt installation as a do-it-yourself project.
- Read and observe all safety rules.
- Shut off gas appliances and their pilot lights (if any) when refueling.
- Keep these instructions and warranty for future reference.
- Follow all applicable State and Local Codes.
- Follow a regular schedule of maintenance as outlined in this manual.

**This is the safety alert symbol used in this manual. It is used to alert you to potential hazards of personal injury or even Death.**

**WARNING – FIRE OR EXPLOSION**

WARNING: These instructions must be followed exactly, or a fire or explosion may result causing property damage, personal injury or death.

Do not store or use gasoline or other flammable vapors and liquids in the vicinity of this or any other appliance.

**FOR YOUR SAFETY --- WHAT TO DO IF YOU SMELL GAS**

- DO NOT attempt to light any appliance.
- DO NOT touch any electrical switch, or use any phone or radio in the vehicle.
- DO NOT start the vehicle's engine or electric generator.
- Evacuate all persons from the vehicle.
- Shut off the gas supply at the gas container or source.
- Contact the nearest certified service technician or gas supplier for repairs.
- If you cannot reach a certified service technician or gas supplier, contact the nearest fire department.
- DO NOT turn on the gas supply until the gas leak(s) has been repaired.
- Installation and Service must be performed by a Girard Products, LLC recommended installer, service agency or gas supplier.

| The table below summarizes the main performance specifications of the Model GSWH-2 | |
|---|---|
| BTU/HR | 42,000 BTU |
| Fuel | Propane (LP Gas) |
| Inlet Pressure | 11" WCI Min to 14" WCI Max |
| Manifold Pressure | 1.5" – 7.8" WCI |
| Power Input | 12VDC < 3 amp |
| Water Operating Pressure | 125 PSI Max |
| Dimensions | Width: 12.5"<br>Height: 12.5"<br>Depth 15.5" |
| Shipping Weight | 22 lbs. |
| ECO | Max Temperature 140° (F) |

## CRITICAL INSTALLATION WARNINGS

- Installation and Service must be performed by a Girard Products, LLC recommended installer, service agency or gas supplier.
- This product is not designed for Do-it-Yourself Installation.
- Install ONLY in recreational vehicles (RV's). RV's are recreation vehicles designed as temporary living quarters for use as recreation, camping, or travel having their own power or towed by another vehicle. This water heater is NOT designed for Marine or Space Heating applications.
- All combustion air must be supplied from the outside of the RV, and all products of combustion must be vented to the outside of the RV.
- DO NOT vent water heater with a venting system serving another appliance or to an outside enclosed porch area.
- DO NOT modify water heater in any way. This is dangerous and will void the warranty.
- DO NOT alter water heater for a positive grounding system.
- DO NOT HI-POT water heater unless the electronic ignition control (circuit board) has been turned 'OFF' (Power switch is in "Off" position)
- DO NOT use battery charger to supply power to water heater even when testing.
- Protect building materials from flue gas exhaust.
- Install the water heater on an exterior wall, with access door opening to the outdoors.
- DO NOT lift the water heater or carry it by holding the exhaust tube.

**USA AND CANADA - FOLLOW ALL APPLICABLE STATE AND LOCAL CODES**

**IN THE ABSENCE OF LOCAL CODES OR REGULATIONS REFER TO CURRENT STANDARDS:**

**The installation must conform to one or more of the following, as applicable:**

1. Local codes or, in the absence of local codes, the National Fuel Gas Code, ANSI Z223. 1/NFPA 54 and/or CSA B149.1, Natural Gas and Propane Installation Code.
2. Local codes or, in the absence of local codes, Recreational Vehicles, NFPA 1192 and/or CAN/CSA-Z240 RV Series.

**WARNING! CAUTION!**

- Improper installation, adjustment, alteration, service or maintenance can cause property damage, personal injury or loss of life.
- Installation and Service must be performed by a Girard Products LLC recommended installer, service agency or gas supplier.

The following instructions apply to the most common type of installation for Girard Products GSWH-2 Water Heater. Consult with Girard Products Technical Support or Engineering department if you have any additional questions regarding your specific installation/application.

**IMPORTANT!**

For proper operation this water heater requires a minimum water flow of .80 Gallon per Minute (gpm) for each Hot Water faucet it supplies.

## Select a Suitable Location

The water heater is designed to be installed on a floor or a fixed platform with access to water, LP gas and a 12VDC electrical connection from the back. It is recommended that the GSWH-2 be located as near the center of the coach as possible.

- **DO NOT INSTALL IN AN AREA WHERE ONE OR BOTH THE INLET AIR VENT AND FLUE VENT CAN BE COVERED BY A DOOR OR ACCESS PANEL WHEN OPENED.**
- **DO NOT INSTALL WHERE THE FLUE VENT IS CLOSER THAN ONE FOOT IN ALL DIRECTIONS FROM ANY WINDOW OR OPENING INTO THE VEHICLE.**
- **DO NOT INSTALL THE WATER HEATER OR ANY OTHER APPLIANCE WHERE IT CAN VENT INTO AN AREA COVERED BY AN AWNING, CANOPY OR ANY OTHER ENCLOSURE.**
  (Note: The water heater can be installed under an RV roll-out/retractable type awning providing the awning does not have an enclosure such as a screen room and/or some type of “walled enclosure”.)

## Site Preparation

To install on carpeted area you must install a metal or wood panel under the water heater that extends at least 3 inches beyond the width and depth of the unit. If water leakage can result in damage to the adjacent area, install a drain pan that can be drained to outside of the vehicle, under the water heater.

Verify that a clearance of 1 inch will remain after installation between the top surface of the water heater and any combustible material. Zero inch clearance is acceptable for the sides.

Make sure that the front edge of the opening is surrounded by a solid frame to firmly anchor the water heater; if needed, build an appropriate frame using 2” X 2” elements. (Figure 1)

The rough opening for the GSWH-2 should be 13” X 13” with right angle corners. The exterior wall opening must be the same dimensions with no radius corners.

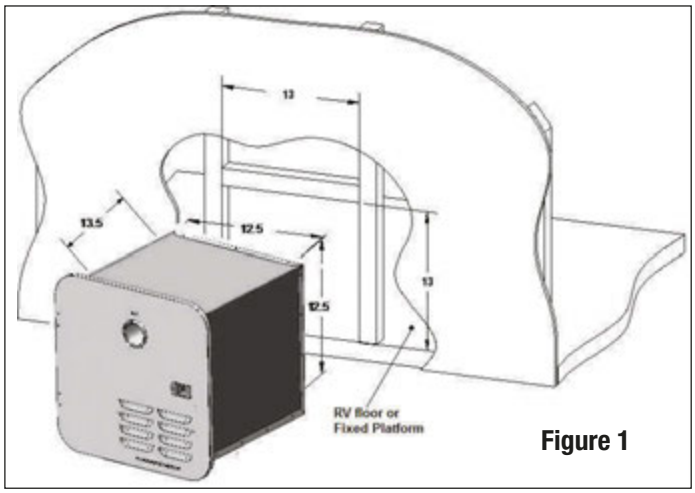

**Figure 1**

Ensure that electrical water and gas connections from the vehicle are in place for installing the unit.

Allow sufficient length and flexibility in the electrical, water and gas lines to reach the connections while the unit is partially inserted into the opening.

## Water Heater Installation

Remove the water heater from the box by grasping the metal sides of the housing and lifting upward until it is free of the box.

Partially insert the water heater into the opening and connect both Hot and Cold water lines to the appropriate ½" NPT fittings. Connections can be made using PEX swivel nut adaptors with NPT straight threads and a cone seal. The PEX swivel nuts require only hand tightening.

**PRODUCT DAMAGE!**

- **Excessive torque will damage the Cold Water and Hot Water Inlets. DO NOT over tighten.**
- **Use two wrenches to tighten the LP Gas compression fitting to avoid damaging the unit.**

Connect the gas to the 3/8" LP Gas compression fitting on the back of the Water Heater (Figure 2).

**Use two wrenches to tighten the compression fitting to avoid damaging the unit.**

**Use additional caulking if needed to complete a permanent seal at the gas line connection.**

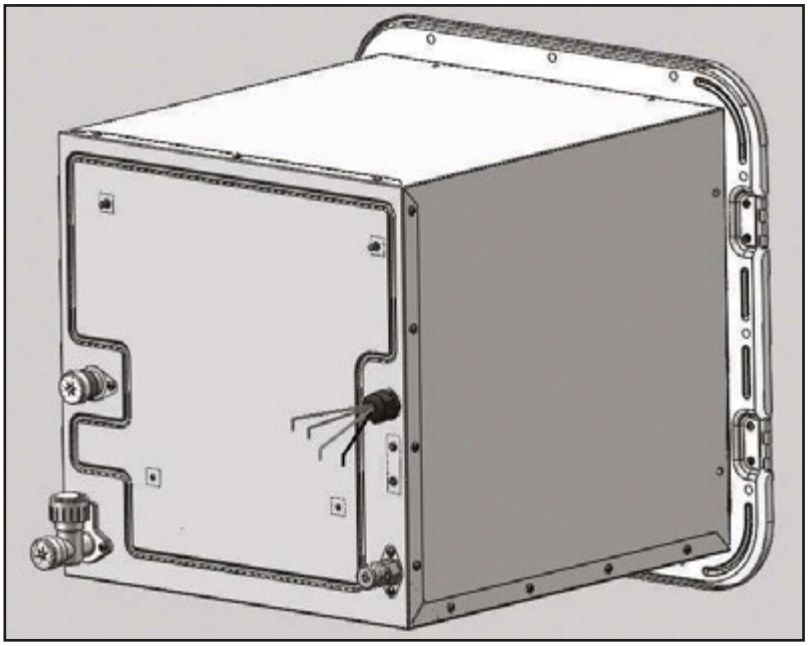

**Figure 2**

## A: Installation of Water Heater with Separate Flange

**Note: For installation of water heater with Integral Flange proceed to section B:**

1. Complete the “skin” application to the vehicle’s outer wall.

2. Position water heater housing into the frame opening with the front edge aligned evenly to the exterior wall (See Figure 3).

3. **To prevent water and air leaks apply sufficient caulking around the entire frame opening and the exterior edge of the water heater housing. Use a suitable caulking material that will result in a permanent seal between the water heater and the vehicle’s frame.**

4. Insert the door flange into the water heater housing and press the flange firmly against the sidewall.

5. When ready to proceed, **apply additional caulking or butyl tape to the back of the door flange that will contact the RV sidewall around perimeter of the opening.**

6. To ensure proper installation and alignment of the door: Align each hole along the inside frame of the flange with the corresponding holes in the water heater housing and secure to the frame using No. 8 - ¾” flat head screws using two screws per side.

7. Secure the flange to the vehicle using No. 8 - ¾” flat head screws through each hole along the perimeter. **Verify that a tight seal exists between the side wall and the flange. If not, repeat above steps.**

8. Remove any excess caulking and clean all surfaces.

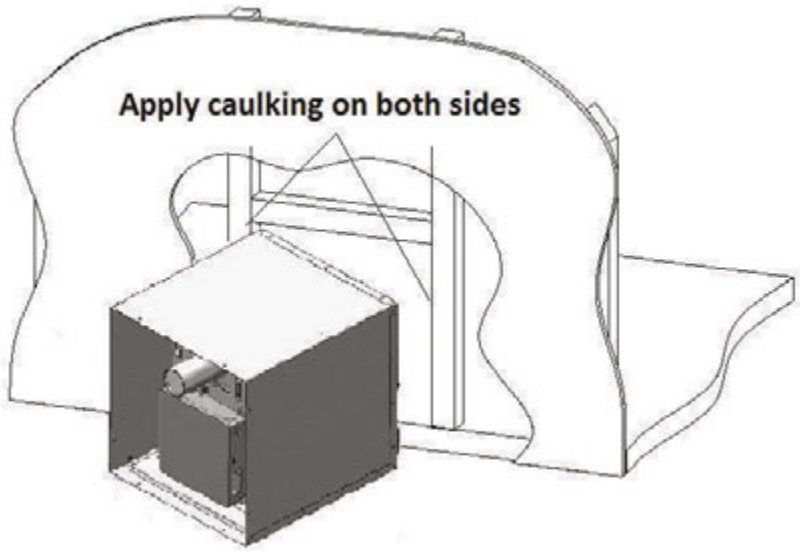


**Figure 3**

## B: Installation of Water Heater with Integral Flange

1. Protect the side wall with masking tape or other suitable means to insure that it is not damaged while installing the water heater.

2. Position the water heater so that the front edge extends from the opening approximately 2” and insert the door flange into the housing.

3. **Permanently attach the flange to the housing by aligning holes and using stainless steel screws or stainless steel rivets with recommended grip range of .188” to .129” and with a hole-size of .129” to .133”.**

4. **To prevent water leaks apply a good amount of caulking or butyl tape on the sidewall and bottom of the opening that will be covered by the flange.**

5. Slide the water heater in place into the opening and **press the door flange against the sidewall.**

6. Secure water heater housing unit to the vehicle using No. 8 - ¾” flat head screws through each hole in the door flange (Figure 4 and Figure 7). **Verify that a tight seal exists between the side wall and the flange. If not, repeat above steps.**

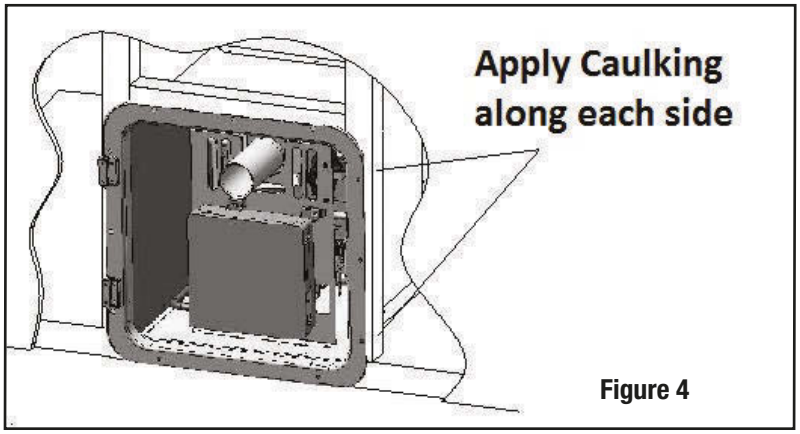


**Figure 4**

## C: Installation of 12VDC Power and User Control Panel (UCP)

1. SET THE WATER HEATER POWER SWITCH TO THE “OFF” POSITION and connect the power supply wires (on rear of water heater – Red & Black wire). Red wire to a 12VDC circuit from the DC panel protected with an interior power switch (not provided) and a 10 amp fuse. Connect Black wire to a ground connection on the panel.
   NOTE - The Red wire is positive (+) and the Black wire is negative (-).

**Figure 5**

2. Determine location for the User Control Panel (UCP – Figure 5) inside the RV. Drill a ¾" hole and then run 2 – 18 gauge wires from the rear of water heater to the ¾" hole **(maximum wire length is 16' or 5M)**. Connect the 2 wires to the User Control Panel 2 wires and to the 2 wires on rear of water heater (UCP wires are Blue or Blue/ Green). Note – UCP wires can be connected to either color/lead wire.

   **CAUTION - Do not connect UCP wires to the power wires (BLACK or RED) on rear of water heater.**

**INSTALLATION NOTE – The micro processor is always on. It draws apprixmately .20 AMPs so it is advisable to turn OFF the 12V power when in storage or dry camping. This can be accomplished by installing or utilizing an interior power switch (not provided) or turning the Water Heater circuit OFF.**

**WARNING!**

DO NOT use matches, candles or other sources of ignition when checking for gas leaks.

## D: Functional Tests

1. Verify the power switch on water heater is in the "OFF" position (located inside water heater compartment) or the interior Water Heater Power Switch (if installed).
2. Turn on the water supply to the unit.
3. Open and then close the HOT & COLD water faucets in the vehicle to fill the pipes with water. If needed, purge air out of all water lines including washers, toilet and outside faucets. Close the faucets when the water is flowing smoothly and verify that there are no leaks at the connections and within the water heater.
4. Confirm that there is a "steady" water flow (not pulsating). If pulsating have the water pump settings adjusted.
5. Turn on the gas supply and check all gas connections for leaks including exterior gas connection and gas connection to the gas valve inside the Water Heater compartment.
6. Turn the power switch to the "ON" position and verify the UCP is illuminated (push RED power button on the UCP to illuminate). It will show the Hot Water temperature setting.
7. The recommended and factory setting is 115 degrees (F) or 46 degrees (C).
8. Open a Hot water faucet and verify that the unit ignites and supplies hot water at the faucet.
9. The UCP display will show the following icons: fan, flame and water temperature. See page Figure 5 for icon identifications.
10. WHILE UNIT IS RUNNING, verify that there are no leaks at the external gas connection and in proximity of the Gas Control within the unit.

## E: Door Installation

**WARNING!**

It is necessary to use only an applicable GSWH-2 Girard Water Heater Door Kit with a Girard GSWH-2 Water Heater. Use of any other brand of water heater door will affect the operation and performance of the Girard Water Heater and may cause a hazardous condition.

The door of the GSWH-2 water heater is hinged on the left side of the mounting flange and swings open from the right (See Figure 6 below). The latch must secure the door closed at all time during operation.

**If necessary for service, the door can be removed by removing hinge screws. Keep screws in a secure pace for remounting the door**. Optional - To further secure the door, you may add a screw in the hole provided in the bottom.

To further secure the door, add a screw in the hole provided in the bottom.

If necessary for service, the door can be removed by extracting the pins that retain the hinges. Take care not to lose the pins to replace the door when finished.

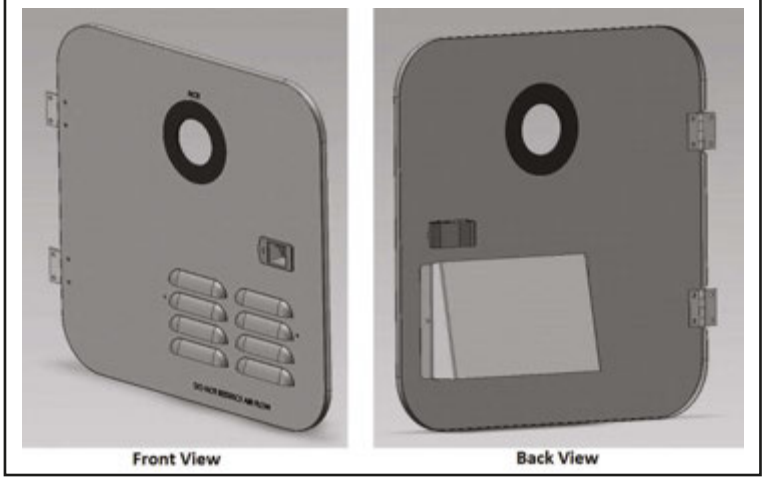


**Figure 6**

**Figure 7**

**WARNING – CAUTION!**

- The appliance and its individual shut-off valve must be disconnected from the gas supply piping system during any pressure testing of that system at test pressures in excess of 1/2psi.
- The appliance and its gas connection must be leak tested before placing the appliance in operation.
- If an external electrical source is utilized, the appliance, when installed, must be electrically grounded in accordance with local codes or, in the absence of local codes, with the National Electrical Code, ANSI/NFPA 70 and/or the CSA C22.1, Canadian Electrical Code.

**This completes the installation instructions of the Model GSWH-2 water heater.**

# Operation

**CONSUMER SAFETY WARNING!**

- Use with LP gas only.
- Shut off all gas appliances and pilot lights when refueling.
- Turn gas OFF at the LP tank when vehicle is in motion. This disables all gas appliances and pilot lights. Gas appliances must never be operated while vehicle is in motion.
- LP tanks must be filled by a qualified gas supplier only.
- Should overheating occur, turn gas OFF at the LP tank and turn the operating switch to the OFF position.

## A: Understanding How the Girard Tankless Water System Works

In a conventional installation the Girard Tankless Water Heater is connected to:

1. The RV's cold water system deriving its water input from a pressurized (45 psi or greater) source such as a shore connection or an RV water pump connected to the RV's fresh water storage tank. NOTE - A steady water flow (no pulsating) will ensure a consistent temperature and performance.

2. The RV's hot water system (i.e. faucets and shower).

3. The RV's LP Gas system capable of supplying its rated BTU requirement. The Girard Products model GSWH-2 introduces a new generation of smart tankless water heater designed specifically for Recreation Vehicles (RV). Its configuration and size are consistent with the tank based RV water heaters currently in use and is designed for OEM's and after- market use by the RV industry.

4. The RV's 12VDC electrical power.

The Water Heater's microprocessor based controller (Control Module) receives from electronic sensors the data it needs to decide each step of the Model GSWH-2 operation.

1. Display on the User Control Panel (UCP) each phase of the Water Heater's operation and receive from the user the operation parameters desired:
   - ON/OFF to activate
   - Desired outlet temperature

2. Verify that all components are in working order and that it is safe to start the unit upon sensing the minimum amount of water flow required (.90 Ga/min)

3. Verify that the blower is operating and supplies the air flow needed to maintain clean combustion.

4. Open the gas control and light the burner according to the procedure required by the safety standard.

5. Adjust the gas flow to reach and maintain the desire temperature set by the user

6. Continue operation as long as:
   - The water flow is above the minimum required
   - The presence of flame is verified
   - No unsafe condition develops

7. Provide the user with a visual indication of the operating conditions turning on the appropriate icon and displaying the current outlet temperature:
   - Fan icon on: Blower operating
   - Flame icon on: Burner is lit and flamed is detected
   - Shower Head on: Water is flowing

8. The button marked “C/F” determines if the temperature is displayed in °F or °C degrees

9. Whenever the “UP” or “Down” are pressed the display shows the set temperature.

10. If an unsafe condition is encountered and the unit shuts off, the display will show an Error Code corresponding to the actual condition that caused the unsafe condition.

See **Troubleshooting** section for a list of all error codes.

## B. Water Control Valve Flow Optimization (optional)

The Water Control Valve of the GSWH-2 provides good control of the outlet temperature within a wide range of inlet water temperatures as are normally encountered in Recreational Vehicles. The unit is shipped with the Water Control Valve set at fully open/maximum flow. If desired, the operating flow can be manually adjusted. It is located on the rear of the water heater.

In case of operation with extreme cold inlet water temperatures (approximately less than 45°(F) the performance of the Water Control Valve can be optimized by adjusting the flow as shown in Figure 8 below.

NOTE - This also can be accomplished by adjusting the hot water flow at the faucet.

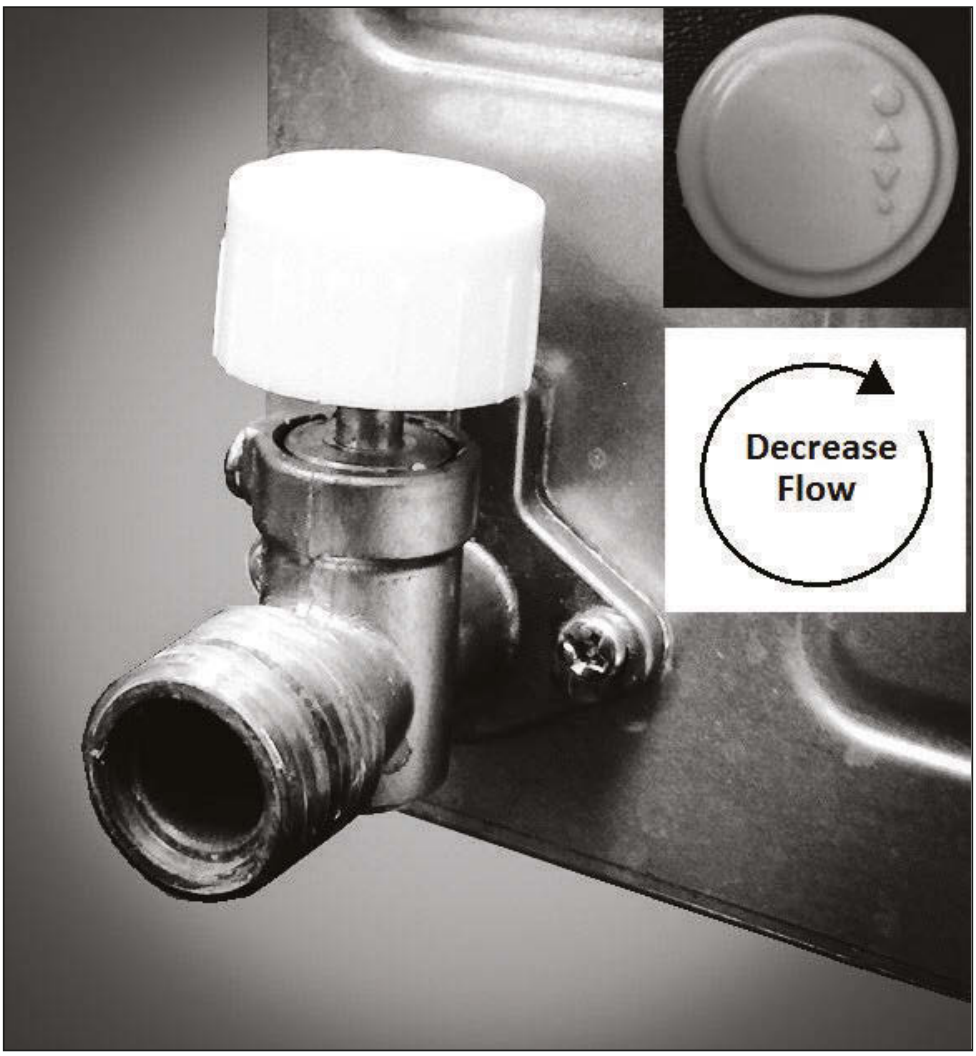


**Figure 8**

## C: Operating Procedures

The Model GSWH-2 can be operated from the User Control Panel (Figure 9) which includes the Power ON/OFF switch.

**Figure 9**

**The model GSWH-2 can be operated in two different ways:**

1. Operate like a Tank Water Heater. The user turns on the hot water and add cold water to achieve the desired Hot water temperature.
2. Select the desired temperature by adjusting temperature setting up (^) or down (v). The UCP settings are from 95° (F) to 124° (F). The unit will maintain the set temperature.

   Note – The recommended and Factory setting is 115° (F) or 46° (C).

**For normal operation:**

1. Turn on the power. The panel will light and will display the current temperature at the inlet of the unit.
2. Press a temperature selection arrow (up or down) to see the current set temperature.
3. Adjust the set temperature to your preference.
4. Turn on the faucet.

**WARNING!**

It is dangerous to operate a Tankless Water Heater unattended. This may occur accidentally if a sufficient leak develops in the water system or if a faucet is left open. For this reason The GSWH-2 will automatically turn off after operating for 20 minutes and displays Error “En” on the Display.

## D: Winter Use

### Winterization

Freezing of the water heater and its plumbing components will result in severe damage not covered by warranty. For this reason it is advisable to follow the recommendations below if the unit is to be stored in a freezing environment or for long periods of time. At the start of the winter season or before traveling to a location where freezing conditions are likely, the unit must be winterized. The very small amount of water present in the heat exchanger DOES NOT require the installation of a bypass kit. Winterization can be accomplished using one of the two common methods of winterization used for RV water systems:

- Compressed Air method: Drain all water from the system opening one tap at a time and using compressed air to purge all remaining water.

- Anti-freeze method: Follow the recommendations of the Recreational Vehicle manufacturer and fill the system with a non-toxic anti-freeze. Make sure that the anti-freeze flows from each tap to complete the process.

### Antifreeze Device

If you wish to operate the water heater in potentially freezing conditions the model GSWH-2 has a built in thermostat that will start the burner whenever the temperature of the Heat Exchanger falls below 38ºF and will automatically shut off when it senses a temperature in excess of 58 º F

**IMPORTANT NOTICE**

To allow the Antifreeze Device to operate you must have sufficient LP Gas in the tank and 12VDC power available and you must leave the unit powered with the ON / OFF switch in the ON position at all times that freezing may occur. It will not protect the entire RV's plumbing system. The RV must be designed for winter use/freezing conditions.

## E: Replacement Parts: Components

| # | Description | Photo | Qty |
|---|---|---|---|
| 1 | Shell Top | | 1 |
| 2 | Proportional Valve (Gas Valve) | | 1 |
| 3 | Valve Bracket | | 1 |
| 4 | Power switch & Fuse holder Assy | | 1 |
| 5 | External Fuse10A | | 1 |
| 6 | Controller Bracket | | 1 |
| 7 | Air Pressure Switch | | 1 |
| 8 | Control Box (Microprocessor) | | 1 |
| 9 | User Control Panel (UPC) Remote Cont. | | 1 |
| 10 | Water Pipe Screw Cover | | 1 |
| 11 | O-Ring | | 1 |
| 12 | Inlet-Valve Gas Train | | 1 |
| 13 | Valve-Burner Gas Train | | 1 |
| 14 | Igniter | | 1 |
| 15 | Burner | | 1 |
| 16 | Shell Bottom | | 1 |

| # | Description | Photo | Qty |
|---|---|---|---|
| 17 | Pressure Relief Valve Direction Tube | | 1 |
| 18 | Pressure Relief Valve | | 1 |
| 19 | Water Pipe Assembly | | 1 |
| 20 | Flow Switch Inlet | | 1 |
| 21 | Filter Screen Inlet | | 1 |
| 22 | Dust Cap: Inlet/Outlet | | 1 |
| 23 | Flow Switch Inlet Knob | | 1 |
| 24 | Water Flow Sensor | | 1 |
| 25 | Rubber Gasket | | 1 |
| 26 | Temperature Probe for Water Inlet | | 1 |
| 27 | Inlet Thermostat (Antifreeze) | | 1 |
| 28 | Temperature Probe for Water Outlet | | 1 |
| 29 | Heater Exchanger | | 1 |
| 30 | (ECO) T-Switch | | 1 |
| 31 | Strain Relief | | 1 |
| 32 | Blow Motor Assembly | | 1 |

## E: Replacement Parts: Door Kit

| # | Description | Photo | Qty |
|---|---|---|---|
| 1 | 2GWHD Door Kit (White) New install/Sub 6 gal | | 1 |
| 2 | 2GHWDB Door Kit (Black) New install/Sub 6 gal | | 1 |
| 3 | 2GWDA6 Door Kit (White) Atwood 6 gal | | 1 |
| 4 | 2GWHDAS10 Door Kit (White) Sub/Atwood 10 gal | | 1 |
| 5 | 2GWD Door Only (White) | | 1 |
| 6 | 2GWHDB Door Only (Black) | | 1 |
| 7 | 2GWHD Flange Only | | 1 |
| 8 | 2GWHDA6 Door Only (White) | | 1 |

| # | Description | Photo | Qty |
|---|---|---|---|
| 9 | 2GWHDA6 Flange Only | | 1 |
| 10 | 2GWHDAS10 Door Only (White) | | 1 |
| 11 | 2GWHDAS10 Flange Only | | 1 |
| 12 | Door Hinge | | 1 |
| 13a | Vent Silicone Ring (White) | | 1 |
| 13b | Vent Silicone Ring (Black) | | 1 |
| 14a | Door Latch Lock (White) | | 1 |
| 14b | Door Latch Lock (Black) | | 1 |
| 15 | Door Latch Spring | | 1 |

## F: Troubleshooting

**If a failure were to occur in the GSWH-2 it will be detected by the Controller Module and the specific cause will be indicated by the Error Code on the User Control Panel display.**

**E0: Water Outlet Temperature Probe failure.**
An open circuit or short circuit condition is detected: This could be due to an internal failure in the Temperature Probe or to a faulty connection (Wires)

**E1: Ignition failure or accidental flame off during ignition.**
If the established flame signal is lost while the burner is operating, the control will respond within 0.8 seconds, the gas valve is de-energized and a new inter-purge and ignition routine will begin. If the burner does not light, the control will de-energize the gas valve and will make one more attempt to relight the burner. If the burner does not relight after the two trials the control will go into LOCKOUT and the unit will need to be turned off before it can operate again. (Turn hot water faucet OFF and back ON to re-set) This could occur for a number of reasons.

**The most common are:**

- Lack of Gas in the tank
- Faulty Igniter
- Faulty Igniter connections
- Improper distance between the Igniter and the Burner
- Accumulated dirt or obstruction between
- Igniter and Burner
- Low Gas Inlet pressure

**E2: Flame sensing interrupted during normal operation. Buzzer will sound.**

Possible causes are the same as indicated by Error E1 if any of these conditions occur during normal operation. A lock out will occur also in these conditions.

**E3: ECO open before ignition or during normal operation.**

This occurs if the ECO thermostat opens. Under normal circumstances this is due to the Temperature of the water at the Outlet exceeds 140˚ F (60°C). The cause must be identified and removed before restarting the unit.

**E4: Water Inlet Temperature Probe probe failure.**

An open circuit or short circuit condition is detected: This could be due to an internal failure in the Temperature Probe or to a faulty connection (Wires)

**E5: Blower motor failure.**

No motor signal was detected before ignition or during normal operation. This could be also caused by a wiring fault in the motor connections.

**E6: Over Temperature.**

Outlet Water Temperature has exceeded 140°F (60°C) for 3 sec.

**E7: Linear valve failure:**

The Controller Module detects an open circuit in the Linear Valve control circuit before ignition or during normal operation indicating a faulty Valve.

**E8: Air pressure switch:**

Air pressure switch not detected for 7 sec. before ignition or is cut-off for 2 sec. during normal operation. This failure may be caused by a faulty motor or a blockage in the air supply or in the exhaust system.

**E9: Flame sensor:**

Flame is sensed before ignition. Buzzer will sound. This is displayed when a short is detected in the flame sensor.

**En: System Timer:**

Water Heater ran longer than 20 min.

**Fd: Water heater operating in Winter Use Mode (Freeze Protection):**

The unit will run for a few seconds and shut off. This will occur when in freezing conditions if the LP gas and 12V power are ON. This Mode will only protect the water heater Heat Exchanger and not the RV's plumbing system.

## Functional Diagram of the Water Heater

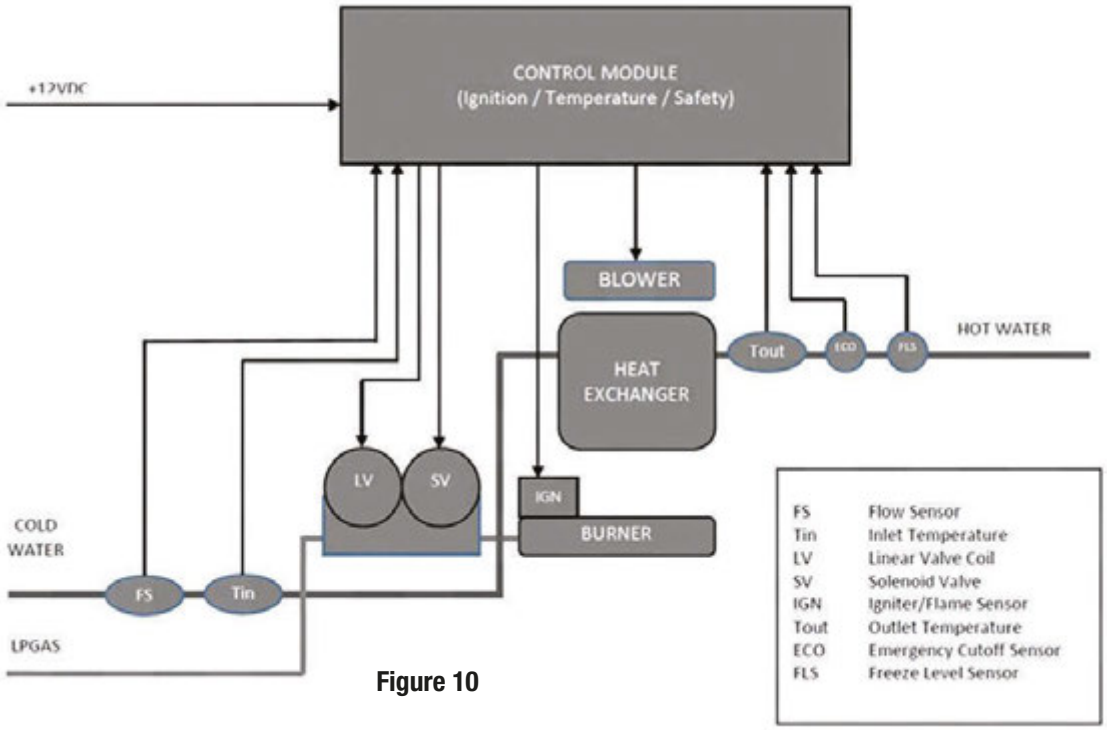


Figure 10

## Wiring Diagram of the Electrical Connections within the Unit

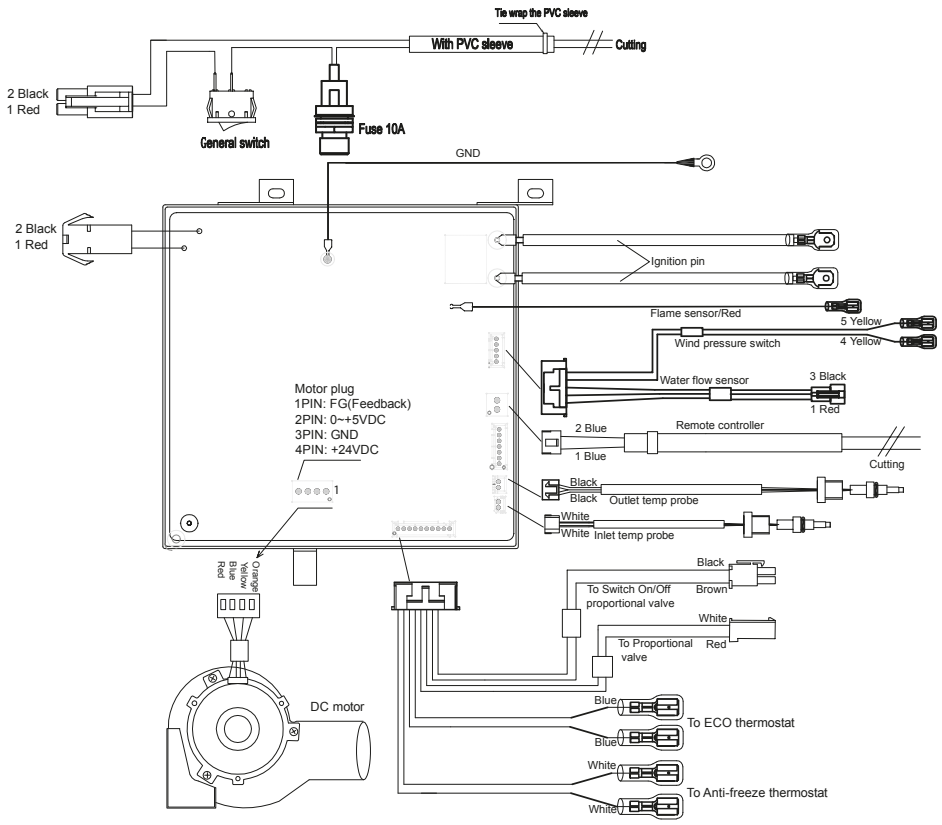


Figure 11

## Exploded view of all of Components

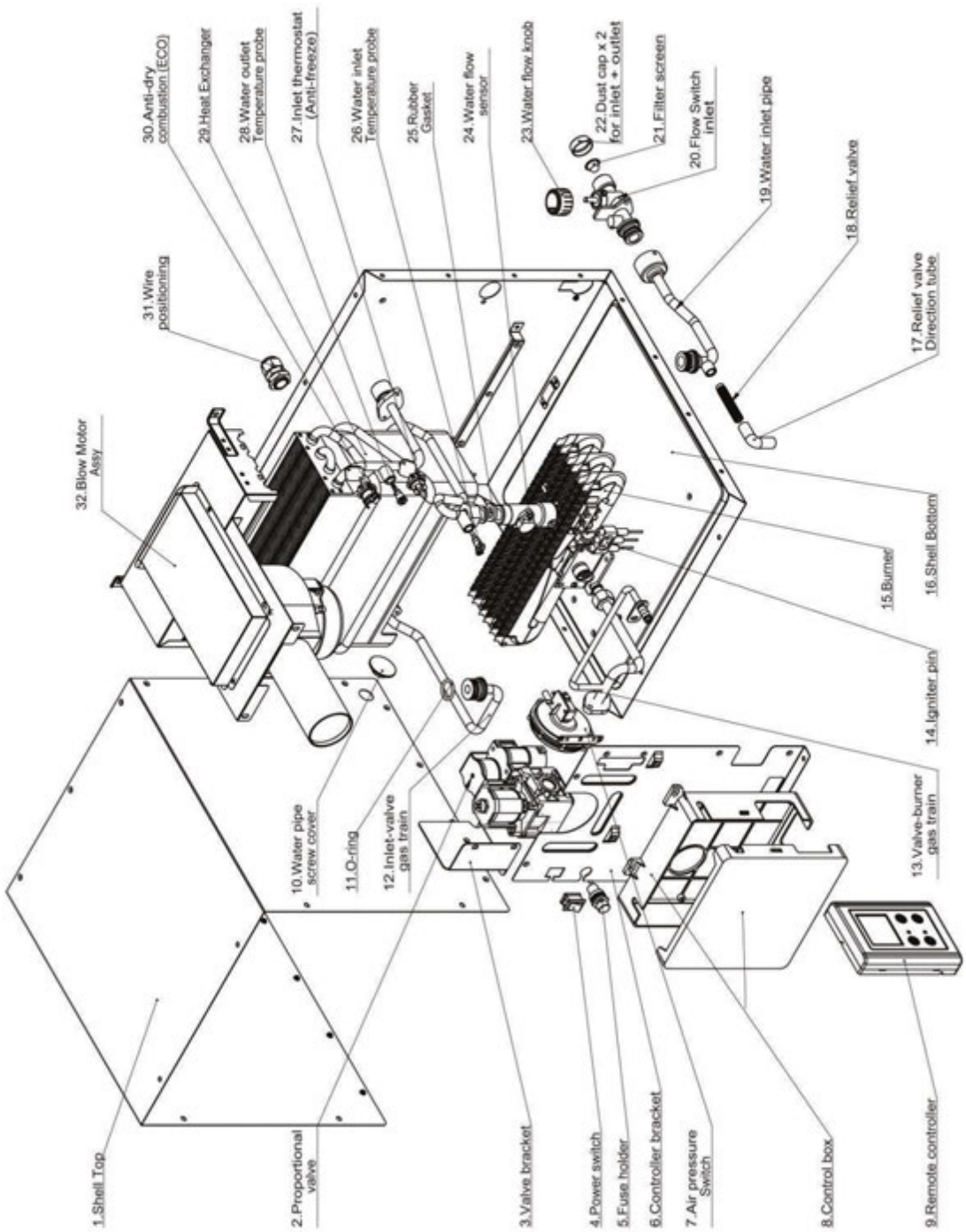


| Item | Name | Qty |
|---|---|---|
| 1 | Shell Top | 1 |
| 2 | Proportional valve (valve) | 1 |
| 3 | Valve bracket | 1 |
| 4 | Power switch | 1 |
| 5 | Fuse holder | 1 |
| 6 | Controller bracket | 1 |
| 7 | Air pressure Switch | 1 |
| 8 | Control box | 1 |
| 9 | Remote controller | 1 |
| 10 | Water pipe screw cover | 1 |
| 11 | O-ring | 1 |
| 12 | Inlet-valve gas train | 1 |
| 13 | Valve-burner gas train | 1 |
| 14 | Igniter pin | 1 |
| 15 | Burner | 1 |
| 16 | Shell Bottom | 1 |
| 17 | Pressure Relief valve Direction tube | 1 |
| 18 | Pressure relief valve | 1 |
| 19 | Water pipe assy | 1 |
| 20 | Flow Switch inlet | 1 |
| 21 | Filter screen | 1 |
| 22 | Dust cap for inlet + outlet | 2 |
| 23 | Flow Switch inlet - Knob | 1 |
| 24 | Water flow sensor | 1 |
| 25 | Rubber gasket | 2 |
| 26 | Temperature probe for water inlet | 1 |
| 27 | Inlet thermostat (Anti-freeze) | 1 |
| 28 | Temperature probe for water outlet | 1 |
| 29 | Heat Exchanger | 1 |
| 30 | Anti-dry combustion (ECO) T-Switch | 1 |
| 31 | Wire positioning | 1 |
| 32 | Blow Motor Assy | 1 |

**Figure 12**

**Control Module and its Connections**

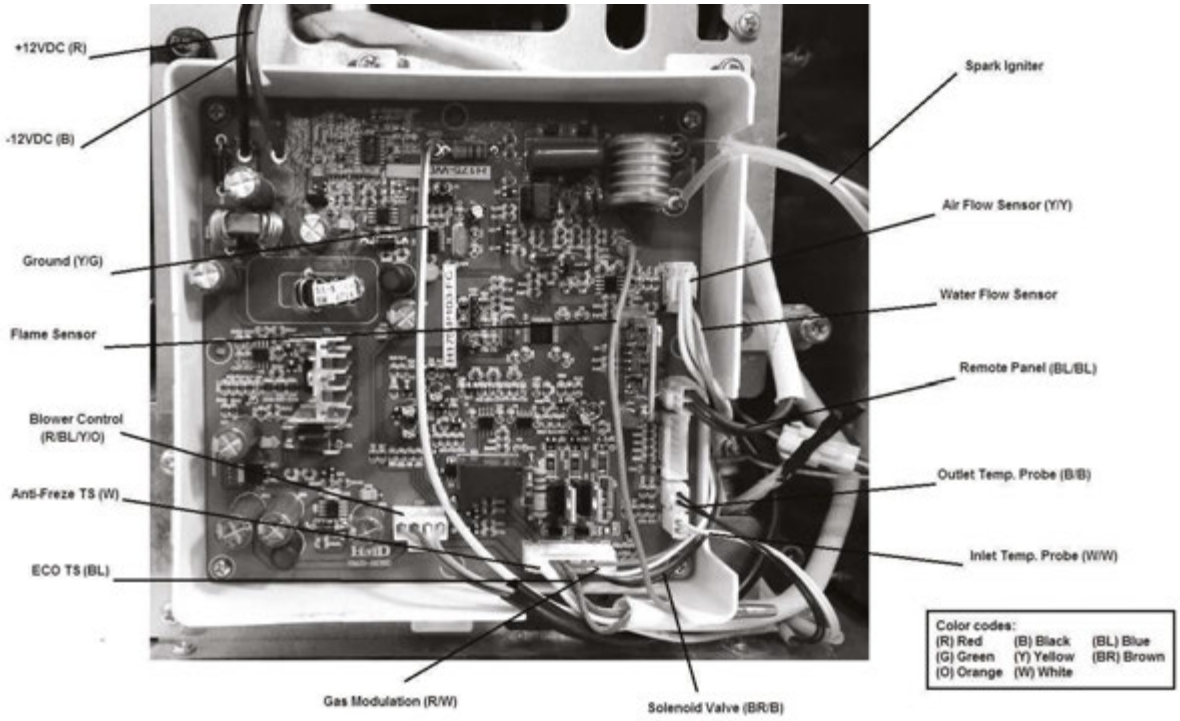


**Figure 13**

# MAINTENANCE

**CAUTION**

Label all wires prior to disconnection when servicing controls.
Wiring errors can cause improper and dangerous operation.
Verify proper operation after servicing

We recommend that the GSWH-2 water heater be inspected monthly by the user and at least once a year by a Girard Products LLC recommended service technician.

Before an inspection, make sure that the Electrical Power, LP Gas and Water systems are turned on. Purge air out of ALL hot and cold water lines. **Verify that there are no combustible materials, gasoline or other flammable vapors and liquids in proximity of the unit.**

A routine inspection must include the following items:

1. **Inspect the integrity of the sealing (caulking or tape) between the side wall and the door of the water heater and ensure that the unit is solidly mounted to the vehicle.**

2. Verify that the air inlet openings (louvers) are completely open and clear of any debris including mud, leaves, twigs, insects etc. Remove all obstructions to allow full air flow.

3. Insects, including mud wasps and spiders, can build nests in the Exhaust Tube Outlet which will affect the performance of the unit. Inspect the Flue Outlet Tube to make sure that It is unobstructed and that the screen is clean. **If debris or insects are present, clean and vacuum to remove any remaining debris. The use of any type of aftermarket screen to cover the vent is not permitted and will void the warranty.**

**4. Open the door and verify that no debris or extraneous combustible materials are present anywhere (especially in the area of the burner and the gas controls); remove any item present and wipe clean the bottom of the housing.**

5. Inspect the interior surface of the housing for any cracks or corroded areas that could allow penetration of gases into or out of the interior of the vehicle. Check especially around the Hot Water, Cold Water, Gas and electrical connections.

6. There is a filter screen on the Water Heater inlet water line connection, unscrew the water line connection from water inlet and check the screen to ensure no debris.

7. Check that all wire connections are firmly in place and there are no signs of chafing or cracks on the insulation. Verify that the spark ignition cable between the Control Board and the igniter is securely in place and not shorted to any metal component.

8. Check relief valve to ensure it has not been leaking (no water residue).

**9. Turn ON the power to the water heater and open a hot water faucet to inspect the flame of the burner. The flame should be of the normal bluish appearance that indicates proper combustion. This can be accomplished by opening the water heater door and observing the flames by looking at the burner under the edge of the heat exchanger.**

**10. If unit overheats (limits) often and the relief valve discharges periodically contact your service center.**

# SERVICE

Your Girard Tankless Water Heater is manufactured to the highest standards and is designed to provide years of trouble free use but in the event you require service please follow the steps outlined below. Remember as an owner, you are required to provide proof of purchase date through a Bill of Sale or other appropriate record.

1. For warranty/service information contact a Girard Products Water Heater Service Center, call the Girard Products Technical Support Department at 949-259-4024 or visit our website at www.greenrvproducts.com for a local recommended service center.

2. If the Girard water heater was installed by the OEM it may be under their warranty, follow the steps suggested by the manufacturer of your RV or contact Girard Products.

3. Call the service center, describe your problem and make an appointment if necessary. **SERVICE CALLS TO CUSTOMER LOCATION ARE THE RESPONSIBILITY OF THE OWNER.**

4. **GIRARD PRODUCTS WILL NOT PAY THE SERVICE CENTER FOR WARRANTY REPAIRS WITHOUT PRIOR APPROVAL.**

5. Provide the Service Center with purchase documentation for your Girard Water Heater.

The Girard Products GSWH-2 Water Heater is designed for use in recreation vehicles for the purpose of heating water as stated in the “rating plate” attached to the water heater. Any other use, unless authorized in writing by the Girard Products Engineering Department, voids the warranty.

**GIRARD PRODUCTS, LLC**
1361 CALLE AVANZADO, SAN CLEMENTE, CA 92673
949-259-4024
www.greenrvproducts.com

GSWH-2 Owner’s Manual Part No. 2GWH9401
02/2016

# This manual has been provided courtesy of My RV Works, Inc.

www.myrvworks.com

## You can find more RV service manuals here:

www.myrvworks.com/manuals

Over the years of running a mobile RV repair service, having a dedicated place to access service manuals for all the different appliances and components found on RVs was something that I always had a desire to create.

I hope this resource makes your RV repairs easier, as it has mine, but please be careful and follow proper safety practices when attempting to repair your own RV.

If in doubt, please consult with a professional RV technician!

*DARREN KOEPP - OWNER, MY RV WORKS, INC.*

***All service manuals provided on www.myrvworks.com are believed to be released for distribution and/or in the public domain.***